Cambridge International AS & A Level

Cambridge International Examinations
Cambridge International Advanced Subsidiary and Advanced Level

CANDIDATE NAME

CENTRE NUMBER

CANDIDATE NUMBER

4124303294

PHYSICS **9702/32**

Paper 3 Advanced Practical Skills 2 **May/June 2015**

2 hours

Candidates answer on the Question Paper.

Additional Materials: As listed in the Confidential Instructions.

READ THESE INSTRUCTIONS FIRST

Write your Centre number, candidate number and name on all the work you hand in.
Write in dark blue or black pen.
You may use an HB pencil for any diagrams or graphs.
Do not use staples, paper clips, glue or correction fluid.
DO **NOT** WRITE IN ANY BARCODES.

Answer **both** questions.
You will be allowed to work with the apparatus for a maximum of one hour for each question.
You are expected to record all your observations as soon as these observations are made, and to plan the presentation of the records so that it is not necessary to make a fair copy of them.
You are reminded of the need for good English and clear presentation in your answers.

Electronic calculators may be used.
You may lose marks if you do not show your working or if you do not use appropriate units.

Additional answer paper and graph paper should be used only if it becomes necessary to do so.

At the end of the examination, fasten all your work securely together.
The number of marks is given in brackets [ ] at the end of each question or part question.

For Examiner's Use	
1	
2	
Total	

This document consists of **12** printed pages.

© UCLES 2015

CAMBRIDGE International Examinations

You may not need to use all of the materials provided.

1 In this experiment, you will investigate the forces acting on a wooden strip in equilibrium.

(a) The apparatus has been assembled for you as shown in Fig. 1.1.

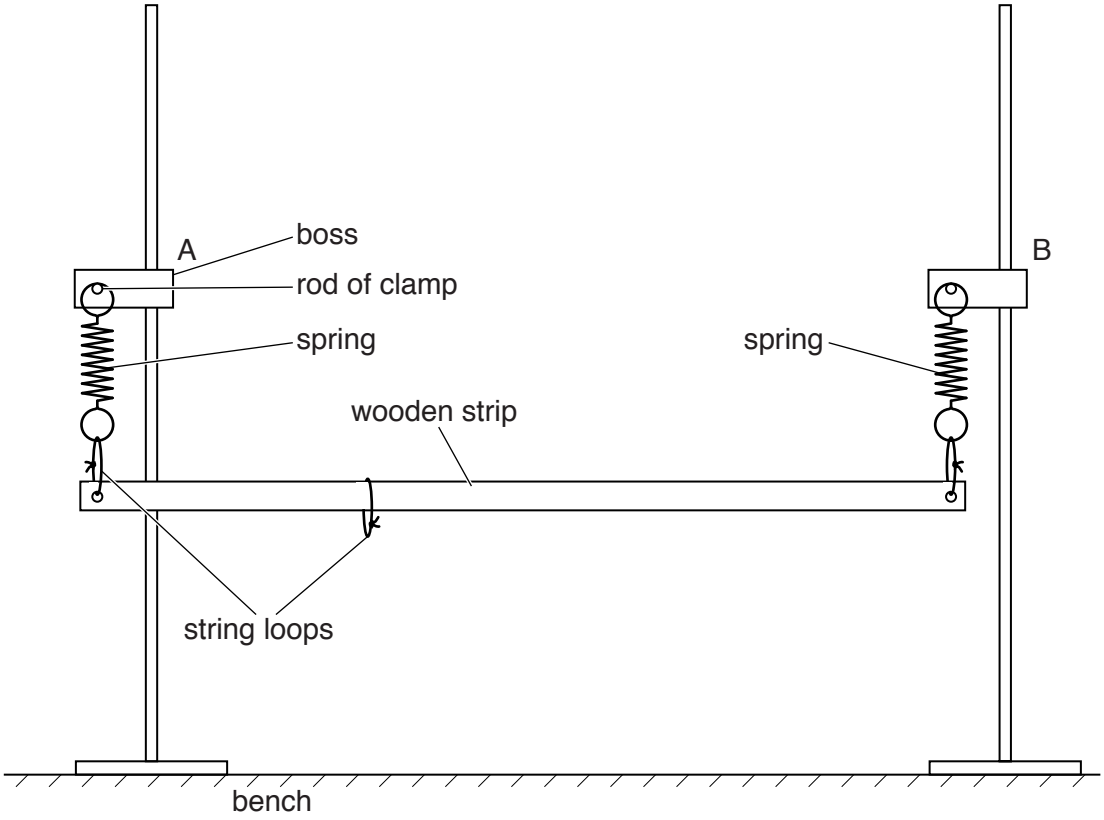

Fig. 1.1

(i) Adjust the positions of the stands so that the springs are vertical.

(ii) If necessary, adjust the height of the boss A so that the wooden strip is parallel to the bench.

© UCLES 2015

(b) (i) Increase the height of boss A by approximately 10 cm.
Leave boss B at the same height throughout the experiment.

(ii) Hang the mass M from the string loop as shown in Fig. 1.2.

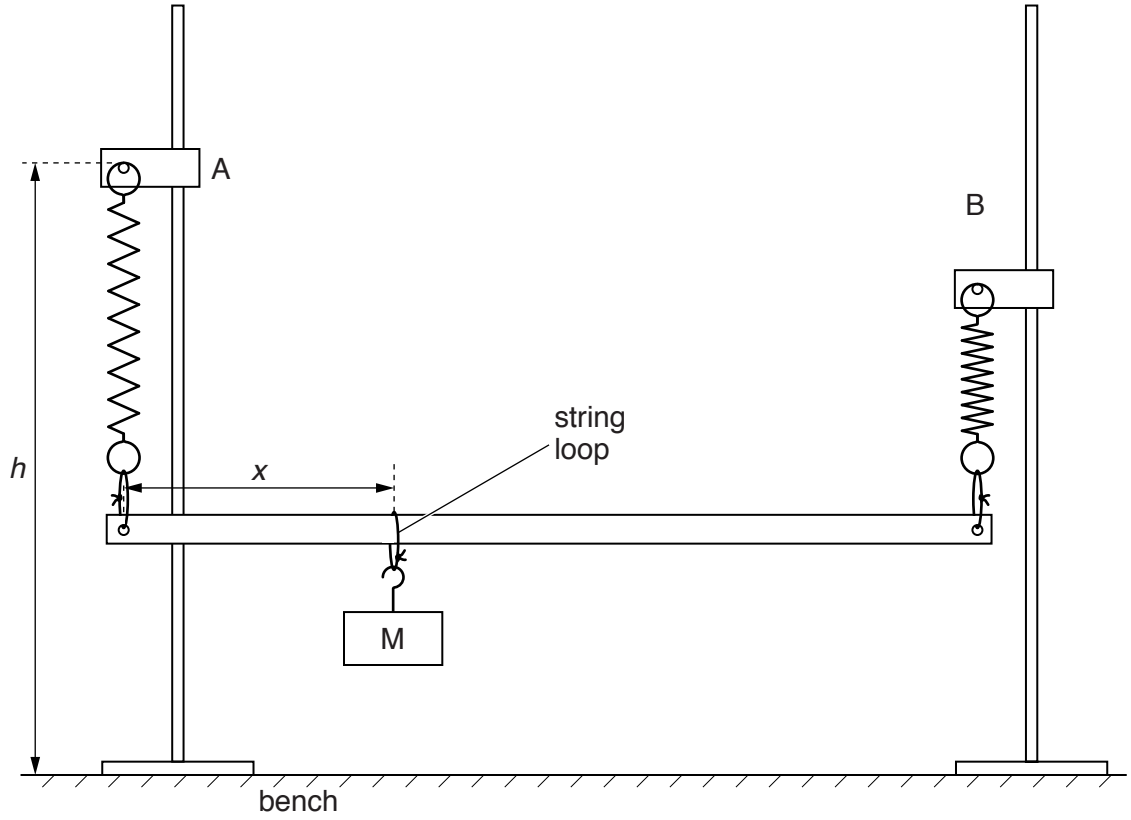

Fig. 1.2

(c) (i) Adjust the position of the string loop until the wooden strip is parallel to the bench again.

(ii) Measure and record the distance *h* from the bench to the top of the spring at A, as shown in Fig. 1.2.

h = ... cm [1]

(iii) Measure and record the distance *x* from the string loop below A to the string loop supporting M, as shown in Fig. 1.2.

x = ... cm [1]

(d) Lower boss A and repeat **(c)** until you have six sets of values of h and x.
Include values of $\frac{1}{h}$ and $\frac{x}{h}$ in your table.

The position of boss B should remain the same throughout the experiment.

[10]

(e) **(i)** Plot a graph of $\frac{1}{h}$ on the y-axis against $\frac{x}{h}$ on the x-axis. [3]

(ii) Draw the straight line of best fit. [1]

(iii) Determine the gradient and y-intercept of this line.

gradient = ...

y-intercept = ...

[2]

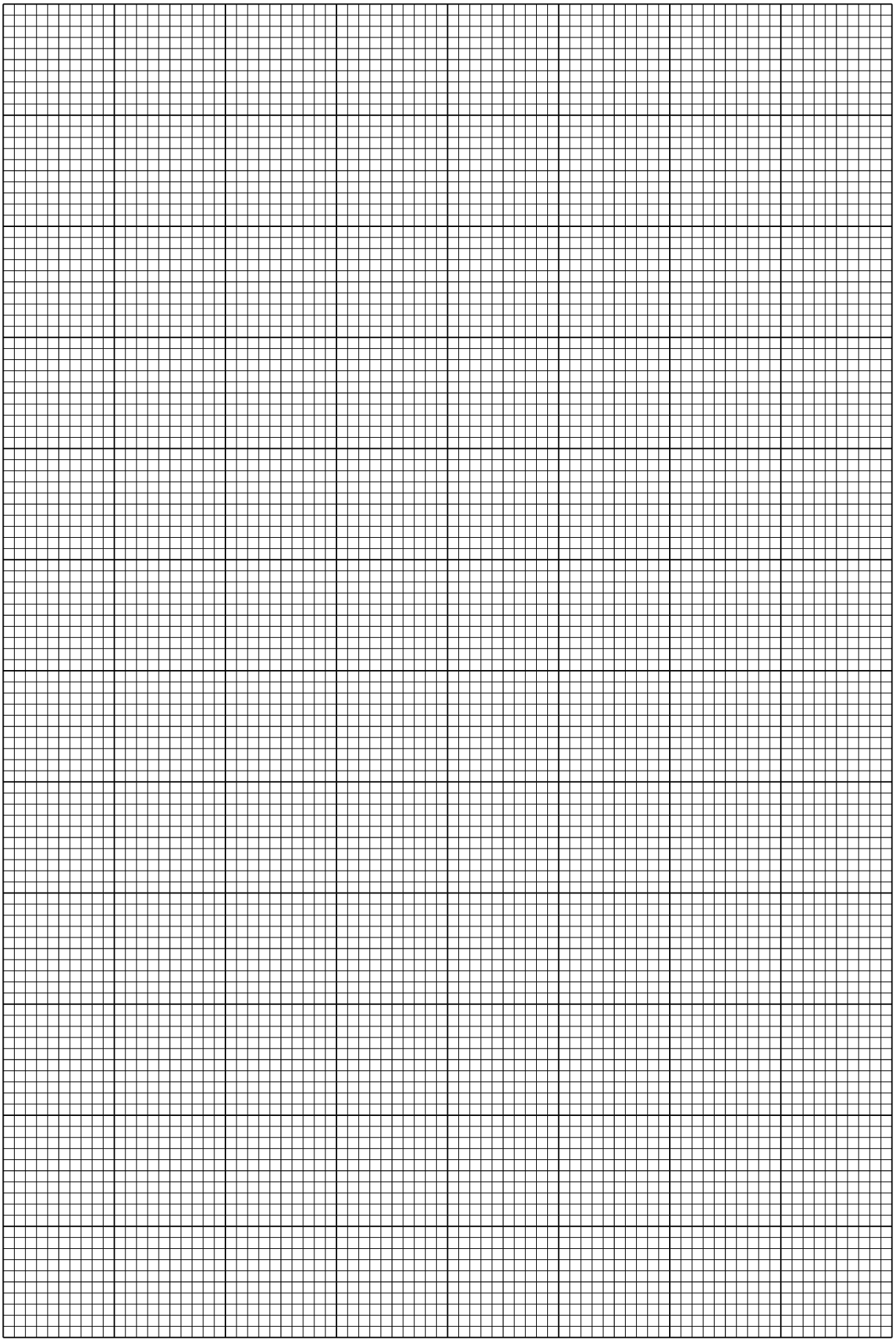

(f) The quantities h and x are related by the equation

$$\frac{1}{h} = \frac{ax}{h} + b$$

where a and b are constants.

Use your answers in **(e)(iii)** to determine the values of a and b.
Give appropriate units.

a = ...

b = ...

[2]

Please turn over for Question 2.

You may not need to use all of the materials provided.

2 In this experiment, you will investigate the force from the surface of water acting on a wire loop.

(a) You are provided with two circular wire loops, each with a hook.
Take the smaller loop.

(i) Make sure that the loop lies flat on the bench, and that the loop is horizontal if suspended by its hook.

(ii) Take measurements to find the diameter *D* of the loop, as shown in Fig. 2.1.

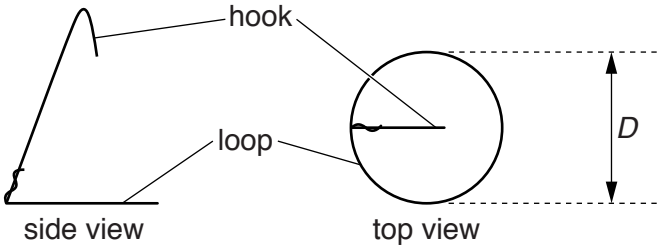

Fig. 2.1 (not to scale)

D = ... cm [2]

(iii) Estimate the percentage uncertainty in your value of *D*.

percentage uncertainty = ... [1]

(iv) Calculate the circumference *C* of the loop using the expression $C = \pi D$.

C = ... [1]

(b) Justify the number of significant figures you have given for your value of *C*.

.....

.....

..... [1]

(c) You are also provided with a stand holding a spring with a pointer.

Hold a ruler vertically behind the pointer, as shown in Fig. 2.2.

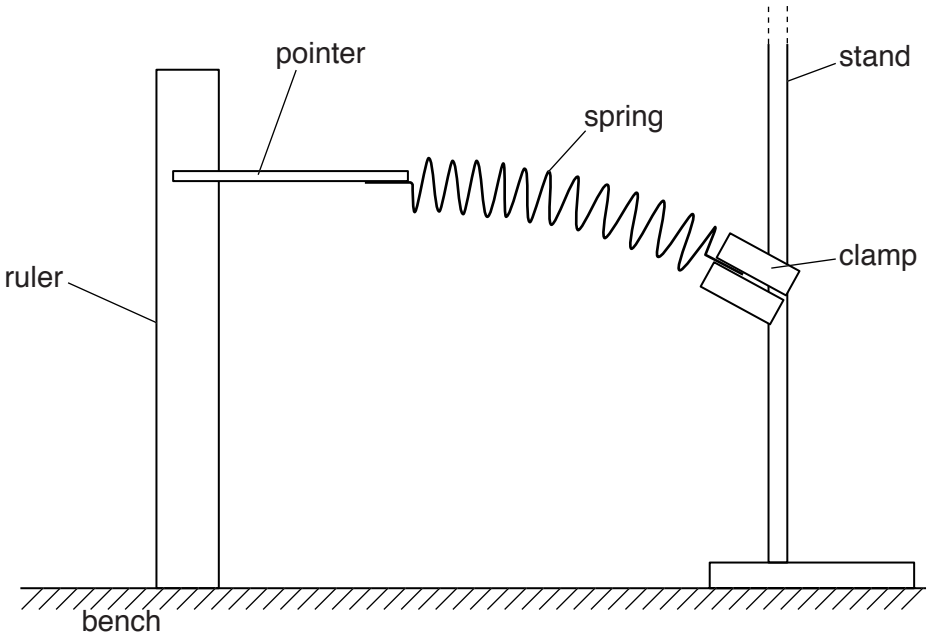

Fig. 2.2

(d) (i) Place the hook of the wire loop onto the end coil of the spring, as shown in Fig. 2.3.

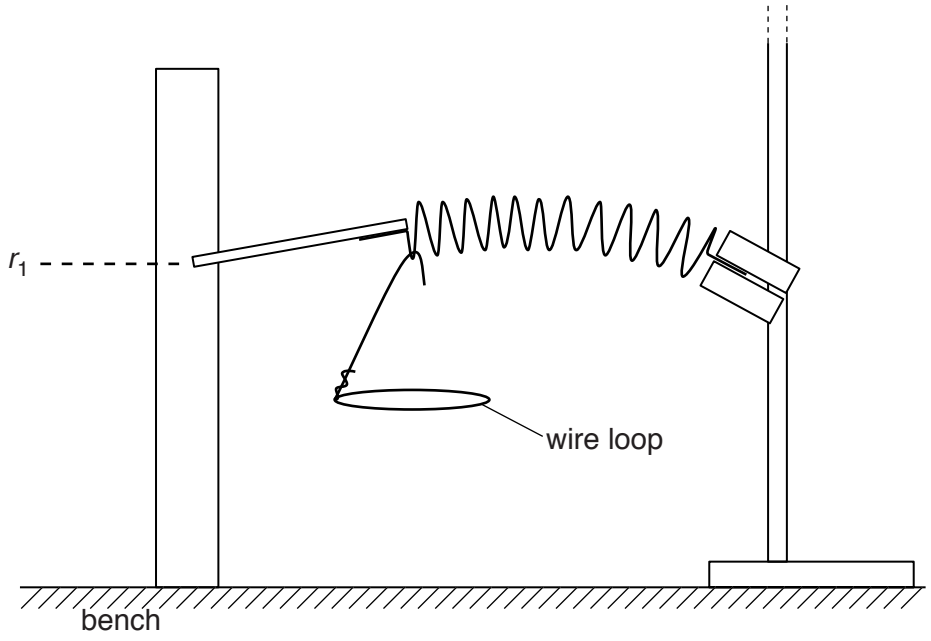

Fig. 2.3

(ii) Record the pointer reading r_1.

r_1 = ... [1]

(iii) Position the beaker of water underneath the wire loop and then lift the beaker up until the water is in contact with the loop, as shown in Fig. 2.4.

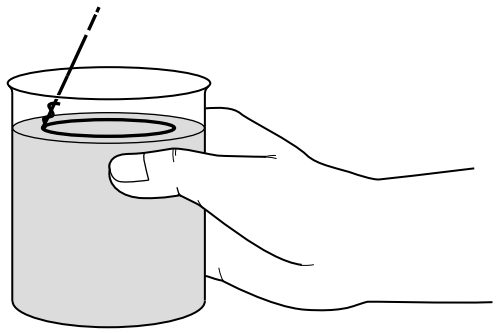

Fig. 2.4

(iv) **Slowly** lower the beaker. The water surface will pull the loop down until it breaks away from the water surface.

(v) Repeat steps **(iii)** and **(iv)**, this time recording the pointer reading r_2 just before the loop breaks away.

r_2 = ... [1]

(vi) Remove the wire loop from the spring.

(e) Using the other wire loop, repeat **(a)(i)**, **(a)(ii)**, **(a)(iv)**, **(c)** and **(d)**.

D = ...

C = ...

r_1 = ...

r_2 = ...
[3]

(f) It is suggested that the relationship between r_1, r_2 and C is

$$r_1 - r_2 = kC$$

where k is a constant.

(i) Using your data, calculate two values of k.

first value of k = ...

second value of k = ...

[1]

(ii) Explain whether your results support the suggested relationship.

.....

.....

.....

..... [1]

(g) (i) Describe four sources of uncertainty or limitations of the procedure for this experiment.

1. .....

.....

2. .....

.....

3. .....

.....

4. .....

.....

[4]

(ii) Describe four improvements that could be made to this experiment. You may suggest the use of other apparatus or different procedures.

1. .....

.....

2. .....

.....

3. .....

.....

4. .....

.....

[4]

Permission to reproduce items where third-party owned material protected by copyright is included has been sought and cleared where possible. Every reasonable effort has been made by the publisher (UCLES) to trace copyright holders, but if any items requiring clearance have unwittingly been included, the publisher will be pleased to make amends at the earliest possible opportunity.

To avoid the issue of disclosure of answer-related information to candidates, all copyright acknowledgements are reproduced online in the Cambridge International Examinations Copyright Acknowledgements Booklet. This is produced for each series of examinations and is freely available to download at www.cie.org.uk after the live examination series.

Cambridge International Examinations is part of the Cambridge Assessment Group. Cambridge Assessment is the brand name of University of Cambridge Local Examinations Syndicate (UCLES), which is itself a department of the University of Cambridge.